Parts Catalog



SP80PL

Mixer

Model: SP80PL

9/23/2025 Rev E
IMPORTANT!
TO EXPEDITE SHIPMENT OF PARTS, ALWAYS SPECIFY MODEL, REV, PART NUMBER, AND SERIAL NUMBER OF UNIT.

GLOBE FOOD EQUIPMENT COMPANY

2215 East River Road
Dayton, Ohio 45439

Parts Department
Toll Free 1-800-745-6238
E-Mail: info@globefoodequip.com
Website: www.globefoodequip.com

Not for resale

© Globe Food Equipment Company, 2025

Table of Contents

Description	Page
SP80PL Base Components	4
SP80PL Head Components	6
SP80PL Hub Components	10
SP80PL Manual Lift Cradle Components	12
SP80PL Power Lift Cradle Components	16
SP80PL Gearbox Components	18
SP80PL Gear Shift Components	22
SP80PL Planetary Components	24
SP80PL Motor Components	28
SP80PL Manual Lift Controls	30
SP80PL Power Lift Controls	32
SP80PL Bowl Scraper Components	36
SP80PL Wiring Diagram, Manual Lift Mixer	38
SP80PL Wiring Diagram, Power Lift Mixer	39
SP80PL 3 PH 220V Power Lift Mixer Schematic	40
SP80PL Wiring Diagram, Power Lift Mixer-Digital Control Panel	41

SP80PL Base Components

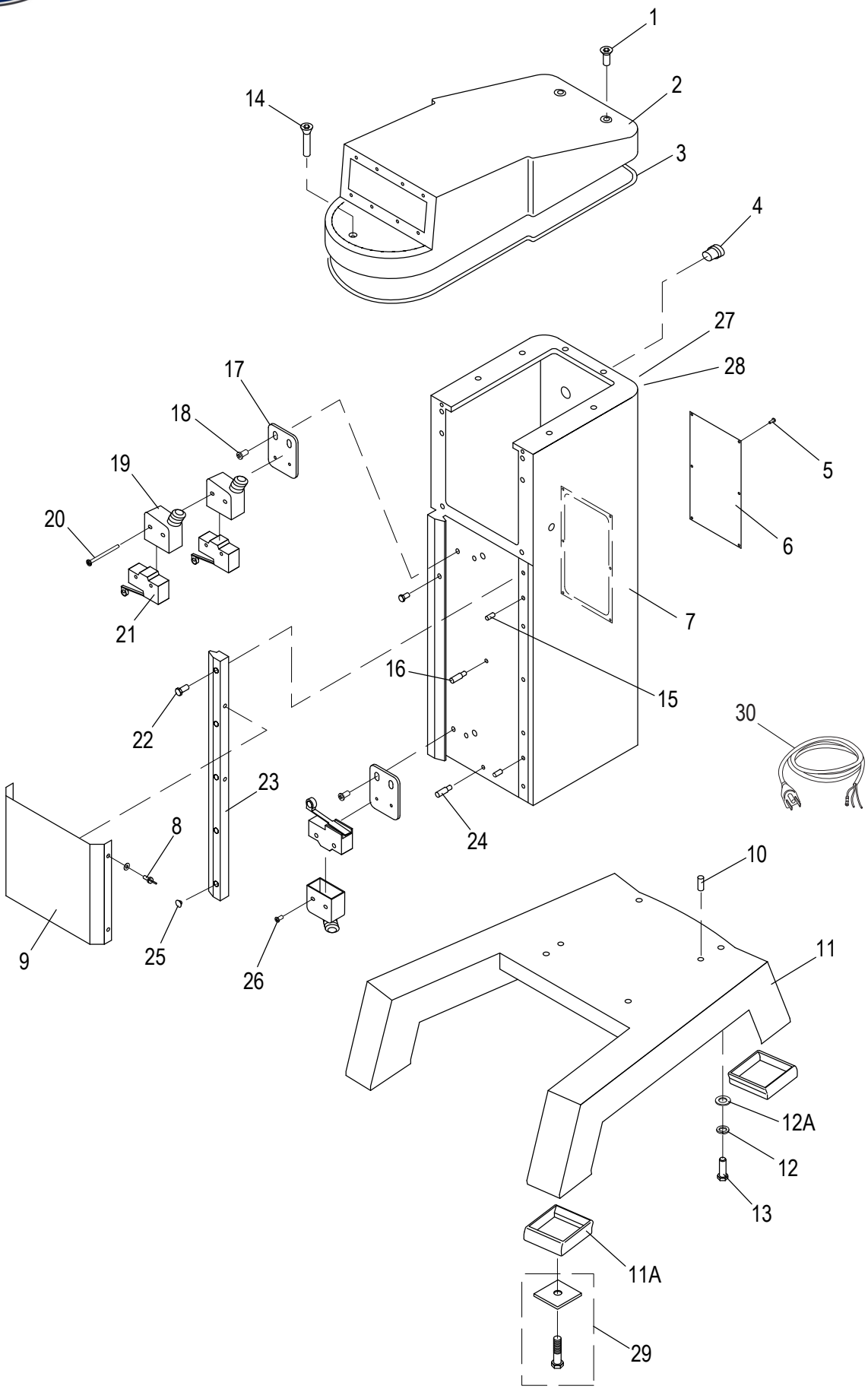

© Globe Food Equipment Company

SP80PL Base Components

Item	Part Number	Description	Qty	Serial Number
1	X80A01	Flat Head Screw, Hex M8-1.25x20mm	2	
2	X80A02-DG	Top Cover	1	
3	X62A03	Gasket	1	
4	X80A04	Strain Relief	1	
5	X30056	Truss Hd Screw, Phllips M5-0.8x12mm, SS	6	
6	X80A06	Back Plate	1	
7		Mixer Column	1	
8	X80A08	Thumbscrew M5x12mm	4	
9	X80A09	Front Cover	1	
10	X80A10	Dowel Pin	2	
11	X80A11-DG	Base	1	
11A	X80A11-1	Foot Kit (4/Set)	1	
12	X80A12	Lock Washer, B.O. M14, OD-24mm, TH 3mm	4	
12A	X80A12-1	Washer M14 Flat	4	
13	X80A10	Dowel Pin	4	
14	X80A01	Flat Head Screw, Hex M8-1.25x20mm	1	
15	X80A10	Dowel Pin	2	
16	X80A16	Threaded Dowel Pin	1	
17	X30216	Bracket	2	
18	X80A18	Round Head Screw, Zn, Phillps M5x0.8x16mm	4	
19	X80E17	Microswitch Cover	3	
20	X30218	Pan Head Screw, Phillips M4-0.7x25mm	2	
21	X30219	Microswitch	3	
22	X80A22	Cap Head Screw, Hex M12-1.75x35mm	5	
23	X80A23	Slide, Front Bowl, Right (Cast Iron)	1	
23	X80A23-1	Bowl Slide (2/Set)	1	7810150 ->
24	X80A24	Threaded Pin	1	
25		Plug, Plastic	5	
26	X80A37	Screw M4x25mm Pan Hd & Flat Washer	2	
27	X91014	Hazardous Voltage Label	1	
28	X91011	3 Phase Caution Label	1	
29	H02748	Bolt & Washer Kit (For Shipping)	1	
30	X02743	Power Cord (3PH)	1	
30	X00667	Power Cord (480V) (Not Shown)	1	
31	X03127	Back Threaded Screw (Not Shown)	1	
32	X03110	Washer (Not Shown)	1	
33	X03128	Front Threaded Sleeve (Not Shown)	1	
34	X03130	Screw Cover (Not Shown)	1	

© Globe Food Equipment Company

SP80PL Head Components

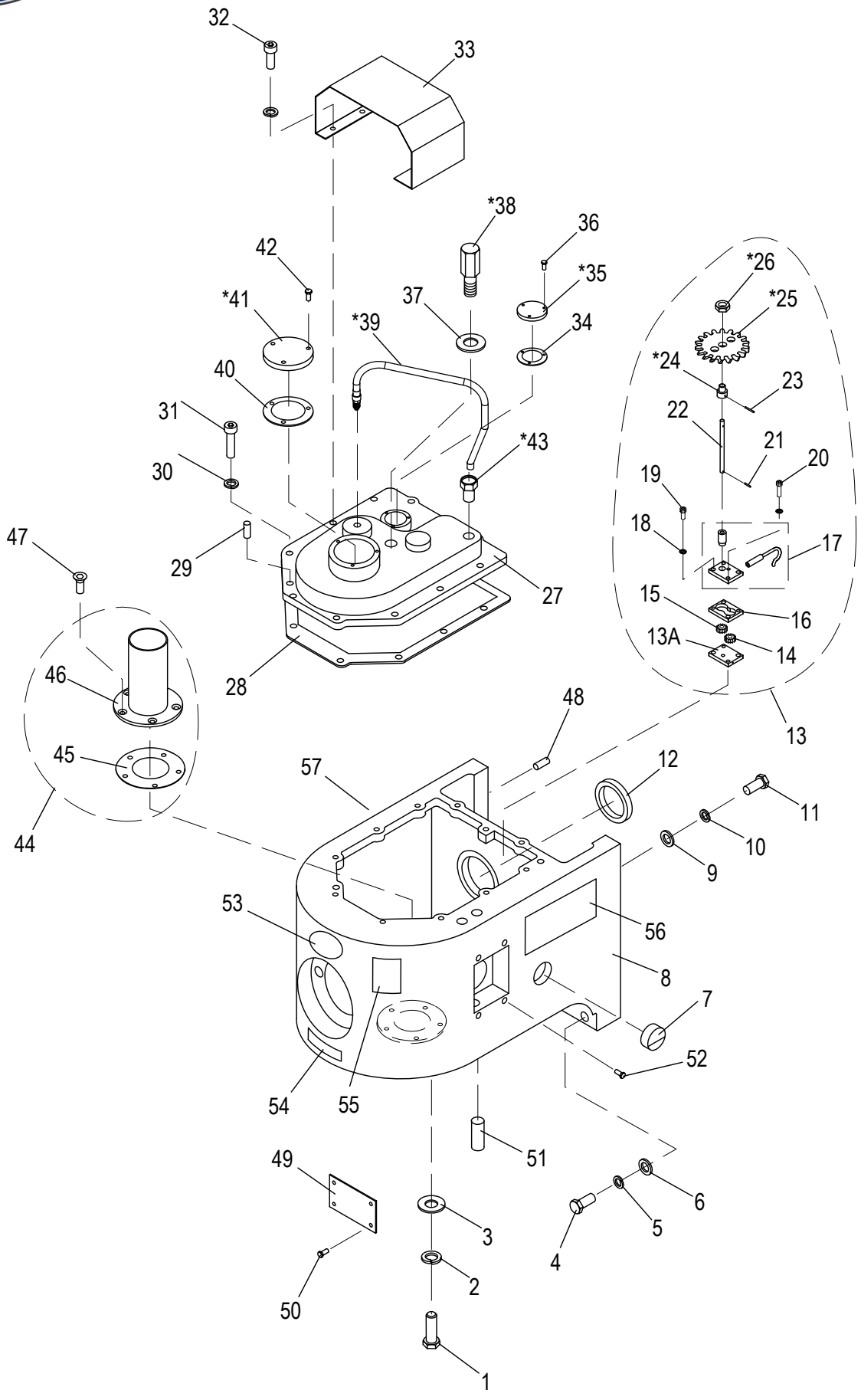

© Globe Food Equipment Company

SP80PL Head Components

Item	Part Number	Description	Qty	Serial Number
1	X80F22	Ext. Hex Hd Screw M10-1.5x16mm	1	
2	X80B02	Lock Washer, Zinc M10, OD-17mm, TH-2mm	1	
3	X80B03	Flat Washer, Zn, M10, OD-25Mm, TH-1.5mm	1	
4	X80B04	Ext. Hex Hd Screw, B.O., M12-1.75x40mm	2	
5	X01372	Lock Washer,SS M12, OD-21mm, TH-2.5mm	2	
6	H00023	Flat Washer, SS M13 OD-24mm, TH 2.5mm	2	
7	X80B07	Oil Gauge	1	
8	X80B08	Transmission Case	1	
9	X80B09	Screw & Washers Kit	6	
10	X01372	Lock Washer,SS M12, OD-21mm, TH-2.5mm	6	
11	X80B11	Ext. Hex Hd Screw M12-1.75x60mm	6	
12	X80B12	Oil Seal, Id-50mm, OD-80mm, TH-10mm	1	
13	X80B13-27	Oil Pump Assembly	1	
13A	X80B13	Plate, Oil Pump - Bottom	1	
14	X80B14	Gear, Oil Pump, Right (15T)	1	
15	X80B15	Gear, Oil Pump, Left (15T)	1	
16	X80B16	Gear Set Pump	1	
17	X80B17-19	Housing & Tube Assy	1	
17		Pump Outlet Bronze Pipe	1	
17		Pump Shaft Bushing	1	
18	X80B26	Washer M5 Split Lock	4	
19	X80B27	Cap Head Screw, Hex, B.O., M5-0.8X16mm	2	
20		Cap Screw M5x25mm Socket Hd	2	
21	X80B22	Roll Pin Ø2x10mm	1	
22	X80B21	Shaft, Oil Pump	1	
23	X80B20	Roll Pin Ø2x18mm	1	
24	X80B23	Conveying Gear Bushing	1	
25	X80B24	Gear (29T)	1	
26		Jam Nut M12	1	
27	X80B25	Gear Cover	1	
28	X80B40	Gasket	1	
29	X80B39	Dowel Pin, SS 1/2 Thread M8-1.25x24mm	2	
30	X30198	Lock Washer M8, OD-13mm, TH-2mm	11	
31	X30197	Ext. Hex Hd Screw SS, M8-1.25x25mm	9	
32	X30099	Cap Hd Screw, Hex, B. O., M8-1.25x35mm	2	
33	X80B33	Cover	1	
34	X80B28	Gasket	1	
35	X80B29	Bearing Retainer	1	
36	X80B30	Ext. Hex Hd Screw, SS M5-0.8X16mm	3	
37	X30111A	Flat Washer M21, OD-37mm, TH-3mm, SS	1	
38	X80B32	Ext. Hex Hd Screw, Zn, M20-2.5X35mm	1	
39	X00703	Hose	1	
39		Grease Fitting	1	
39		Hose Clamp	1	
40	X80B36	Gasket	1	
41	X80B35	Bearing Retainer	1	
42	X80B34	Round Hd Screw, Phillips, Zn M4-0.7X16mm	3	
43	X00704	Oil Fill Plug	1	
44	X80B42-43	Oil Tube & Gasket Kit	1	
45		Gasket, Lube Overflow Cylinder	1	
46		Lube Overflow Cylinder	1	
47	X80B41	Flat Head Screw, Hex, Zn, M6-1.0X12mm	5	
48	X80B56	Dowel Pin Ø10x20mm	2	

© Globe Food Equipment Company

SP80PL Head Components

Item	Part Number	Description	Qty	Serial Number
49	X80B53	Cover	1	
50	X80B54	Ext. Hex Hd Screw, SS, M5-0.8X14mm	4	
51	X80B55	Dowel Pin	1	
52	X80E09	Cap Head Screw, B.O., Hex M8-1.25X25mm	4	
53	871-2	Globe Logo Decal 3.5"	1	
54	X91012	Arrow Label	1	
55	X91010	Gear Damage Label	1	
56	X91015	Injury Warning Label (French)	1	
57	X91007-F	French Warning Label	1	

© Globe Food Equipment Company

INTENTIONALLY LEFT BLANK PAGE

© Globe Food Equipment Company

SP80PL Hub Components

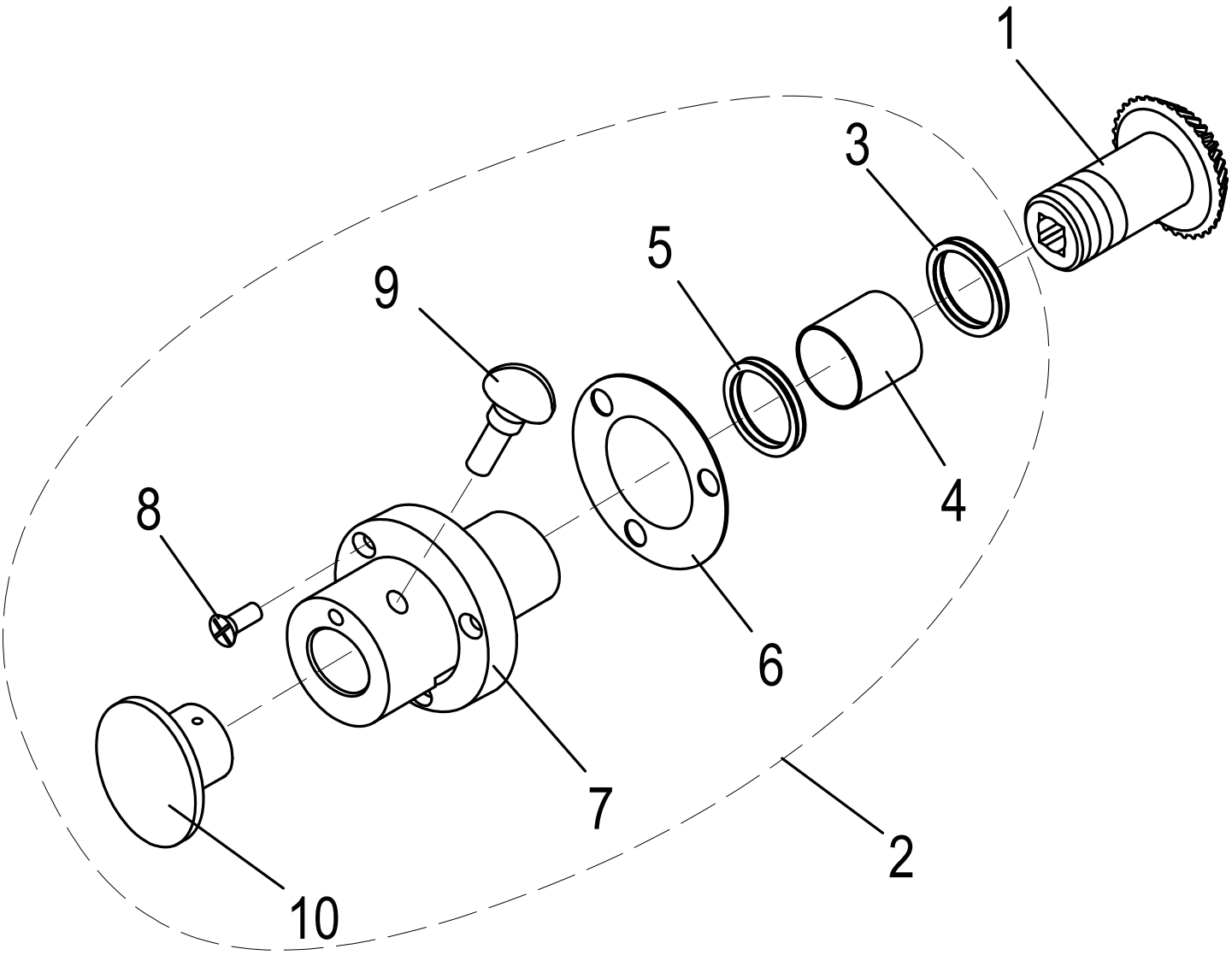

© Globe Food Equipment Company

SP80PL Hub Components

Item	Part Number	Description	Qty	Serial Number
1	X80B44	Level Gear (16T)	1	
2	X80B45-52	Hub Kit	1	
3	X30018-1	Flat Washer, Zinc ID-35mm, OD-55mm, TH-1mm	1	
4	X10075	Needle Bearing	2	
5	X10089	Oil Seal ID-35mm, OD-45mm, TH-8mm	1	
6	X80B48	Gasket	1	
7	X80B50-DG	Hub Assembly	1	
8	X80B52	Cap Hd Screw, Hex, B.O., M6-1.0X20mm	3	
9	X10005	Thumb Screw (TS 1/2"-#12)	1	
10	X80B51	Hub Plug	1	

© Globe Food Equipment Company

SP80PL Manual Lift Cradle Components

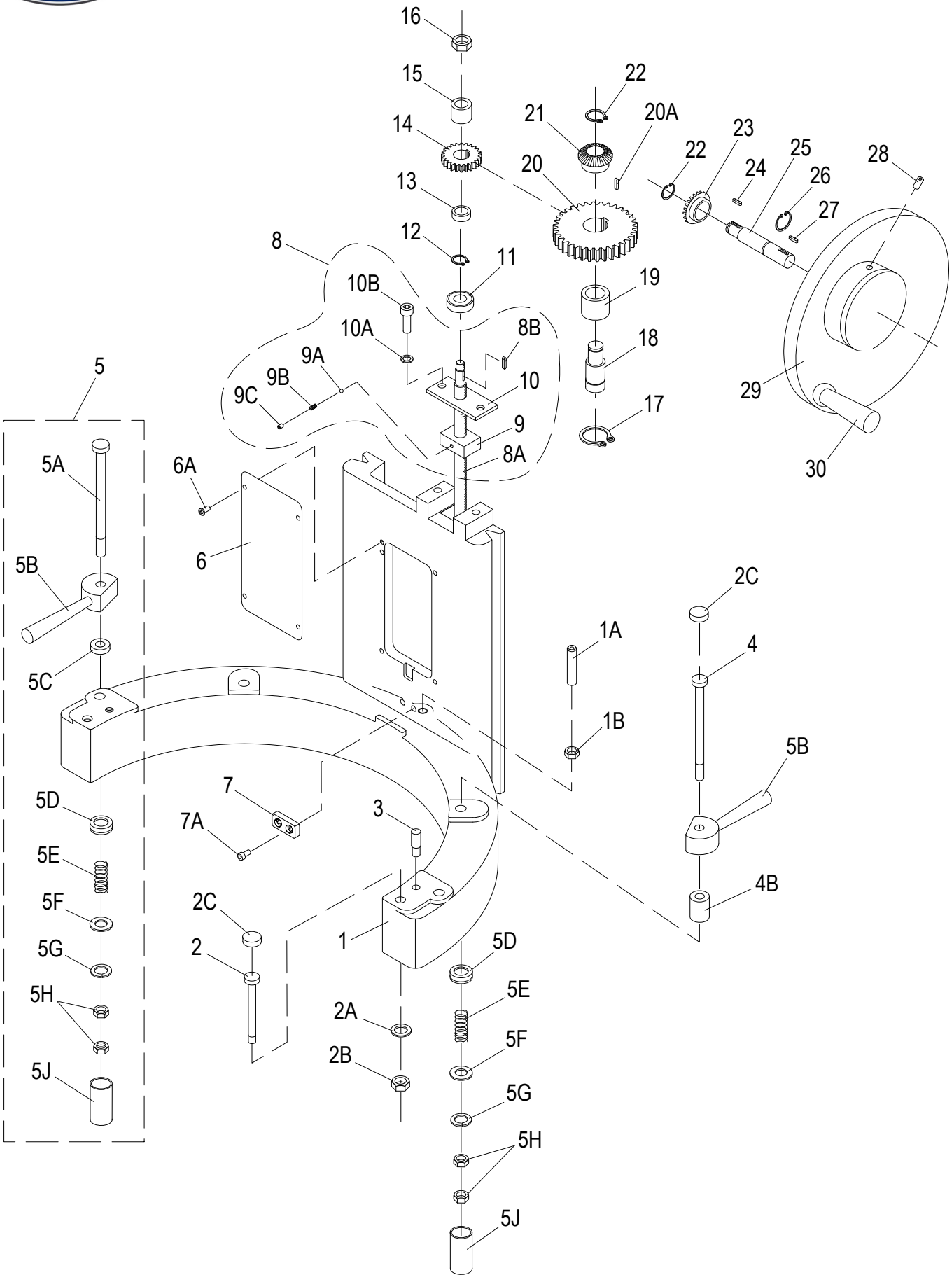

© Globe Food Equipment Company

SP80PL Manual Lift Cradle Components

Item	Part Number	Description	Qty	Serial Number
1	X80C12	Bowl Cradle	1	
1A		Set Screw M12x80mm Socket Hd - Cup Pt.	1	
1B		Nut M12 Hex	1	
2	X80C13	Dowel Screw Kit	2	
2A	X01372	Lock Washer,SS M12, OD-21mm, TH-2.5mm	2	
2B	X80C10	Acorn Nut, Zn, M10-1.5, OD-17mm, TH-18mm	2	
2C		Screw Cover	4	
3	X80C14	Stop Pin	2	
4	X80C09	Ext. Hex Hd Screw M12-1.75x184mm	2	
4B	X80C07	Rear Bushing	2	
5	X80C05	Bowl Clamp Kit (2/Set)	2	
5A	X80C06	Ext. Hex Hd Screw (Front), Zn, M12-1.75X159mm	2	
5B	X80C05-1	Bowl Clamp (2/Set)	4	
5C	X80C04	Bushing	2	
5D		Hardware Cap Retainer	4	
5E	X80C03	Spring	4	
5F	X02617	Flat Washer, SS M12,OD-29mm, Th-1mm	4	
5G	X01372	Lock Washer,SS M12, OD-21mm, TH-2.5mm	4	
5H	X80C01	Thin Hex Nut M12-1.75, OD-19mm, TH-6mm	4	
5J		Hardware Cap	4	
6	X80C17	Front Cover	1	
6A	X10083	External Hex Hd Screw, SS, M5-0.8X10mm	4	
7	X80C16	Locking Bracket	1	
7A	X30099	Cap Hd Screw, Hex, B. O., M8-1.25x35mm	2	
8	X80C19-24	Bowl Raise Screw Kit	1	
8A		Bowl Raise Screw	1	
8B	X80H55	Round End Key H-6mm, W-6mm, L-25mm	2	
9		Nut, Bowl Lift	1	
9A		Roller	1	
9B		Spring	1	
9C	H00659	Cup Point Set Screw, Hex M6-1.0x6mm	1	
10		Nut Mounting Plate	1	
10A	X80C22	Lock Washer M10, OD-18mm, TH-2mm	1	
10B	X80C23	Cap Hd Screw, Hex, B.O., M10-1.5x20mm	2	
11	X08114	Bearing (6203LU)	1	
12	X80C26	Int. Retaining Ring, B.O., ID-40mm, OD-43mm, TH-1.75mm	1	
13	X80C27	Lower Bushing	1	
14	X80C28	Oblique Gear (31T)	1	
15	X80C29	Bronze Bushing, Upper	1	
16	H00622	Hex Nut, SS M16x2,OD-24mm, TH-13mm	1	
17	X30044	Ext. Retaining Ring, B.O. ID--23mm, OD-25mm, TH-1mm	1	
18	X80C33	Drive Shaft	1	
19	X80C34	Sleeve	1	
20	X80C35	Oblique Gear (41T)	1	
20A	M120-K	Key	1	
21	X80C37	Gear (23T)	1	
22	H00195	Retaining Ring, External	3	
23	X80C40	Gear (23T)	1	
24	X20123	Round End Key H-5mm, W-5mm, L-18mm	1	
25	X80C42	Shaft	1	
26	H00195	Retaining Ring, External	1	
27	X30073	Round End Key H-5mm, W-5mm, L-25mm	1	
28	X80C45	Cup Point Set Screw, Hex M8-1.25X16mm, B.O.	1	

© Globe Food Equipment Company

SP80PL Manual Lift Cradle Components

Item	Part Number	Description	Qty	Serial Number
29	X80C46	Hand Wheel	1	
30	X80C47	Handle	1	

© Globe Food Equipment Company

INTENTIONALLY LEFT BLANK PAGE

© Globe Food Equipment Company

SP80PL Power Lift Cradle Assembly

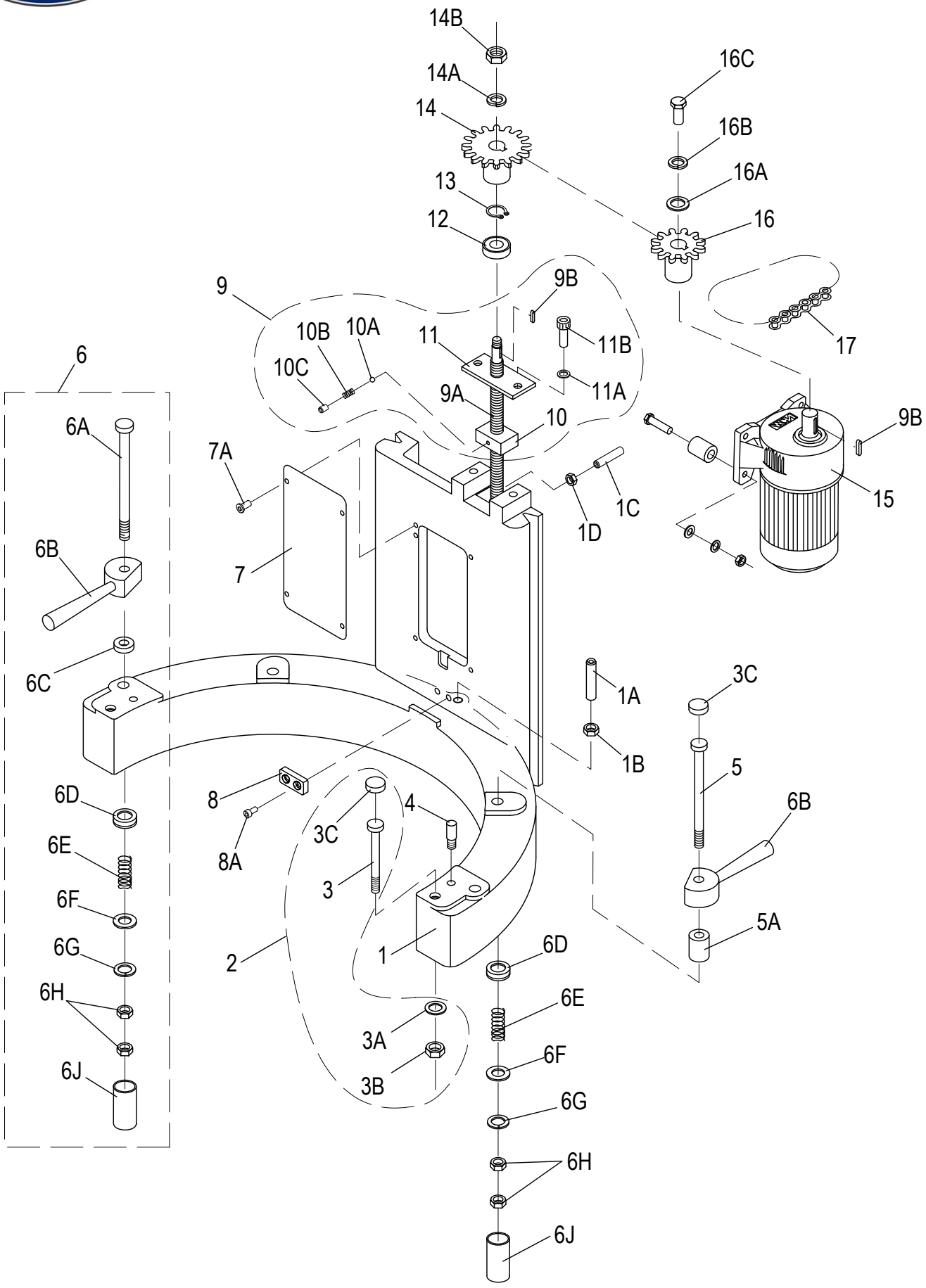

© Globe Food Equipment Company

SP80PL Power Lift Cradle Assembly

Item	Part Number	Description	Qty	Serial Number
1	X80C12	Bowl Cradle	1	
1A		Set Screw M12x80mm Socket Hd - Cup Pt.	1	
1B		Nut M12 Hex	1	
1C		Set Screw M6x40mm Socket Hd - Cup Pt	1	
1D		Nut M6 Hex	1	
2	X80C13	Dowel Screw Kit	1	
3		Screw M10	1	
3A	X01372	Lock Washer,SS M12, OD-21mm, TH-2.5mm	1	
3B	X80C10	Acorn Nut, Zn, M10-1.5, OD-17mm, TH-18mm	1	
3C		Screw Cover	2	
4	X80C14	Stop Pin	2	
5	X80C09	Ext. Hex Hd Screw M12-1.75x184mm	2	
5A	X80C07	Rear Bushing	2	
6	X80C05	Bowl Clamp Kit (2/Set)	1	
6A	X80C06	Ext. Hex Hd Screw (Front), Zn, M12-1.75X159mm	2	
6B	X80C05-1	Bowl Clamp (2/Set)	1	
6C	X80C04	Bushing	2	
6D		Hardware Cap	4	
6E	X80C03	Spring	4	
6F	X02617	Flat Washer, SS M12,OD-29mm, Th-1mm	4	
6G	X01372	Lock Washer,SS M12, OD-21mm, TH-2.5mm	4	
6H	X80C01	Thin Hex Nut M12-1.75, OD-19mm, TH-6mm	4	
6J		Hardware Cap	4	
7	X80C17	Front Cover	1	
7A	X10083	External Hex Hd Screw, SS, M5-0.8X10mm	4	
8	X80C16	Locking Bracket	1	
8A	X30099	Cap Hd Screw, Hex, B. O., M8-1.25x35mm	2	
9	X80C19-24	Bowl Raise Screw Kit	1	
9A		Bowl Raise Screw	1	
9B	X80H55	Round End Key H-6mm, W-6mm, L-25mm	2	
10		Nut Block	1	
10A		Roller Ball Ø5 SS	1	
10B		Spring	1	
10C	H00659	Cup Point Set Screw, Hex M6-1.0x6mm	1	
11		Nut Mounting Plate	1	
11A	X80C22	Lock Washer M10, OD-18mm, TH-2mm	2	
11B	X80C23	Cap Hd Screw, Hex, B.O., M10-1.5x20mm	1	
12	X08114	Bearing (6203LU)	1	
13	X80C26	Int. Retaining Ring, B.O., ID-40mm, OD-43mm, TH-1.75mm	1	
14	X80H48	Gear (16T)	1	
14A	X80H49	Lock Washer & Nut Kit	1	
14B	H00622	Hex Nut, SS M16x2,OD-24mm, TH-13mm	1	
15	X00705	Motor, 1/8Hp 220V 50/60Hz 1Ph	1	->7810151
15	X80H56	Lift Motor (220V/50-60Hz/3Ph)	1	->7810151
15	XA-8038-1	Lift Motor, 220/380V/50-60Hz/1Ph	1	7810151 ->
15	XA-8038-3	Lift Motor, 220/380V/50-60Hz/3Ph	1	7810151 ->
16	X80H53	Gear (11T)	1	
16A	X25069	Thick Flat Washer, Zinc M6, OD-24mm, TH-3mm	1	
16B	X08008	Lock Washer, Zinc M6, OD-12mm, TH-2mm	1	
16C	X80H50	External Hex Hd Screw, B.O. M6-1.0X16mm	1	
17	X80H54	Chain	1	

© Globe Food Equipment Company

SP80PL Gearbox Components

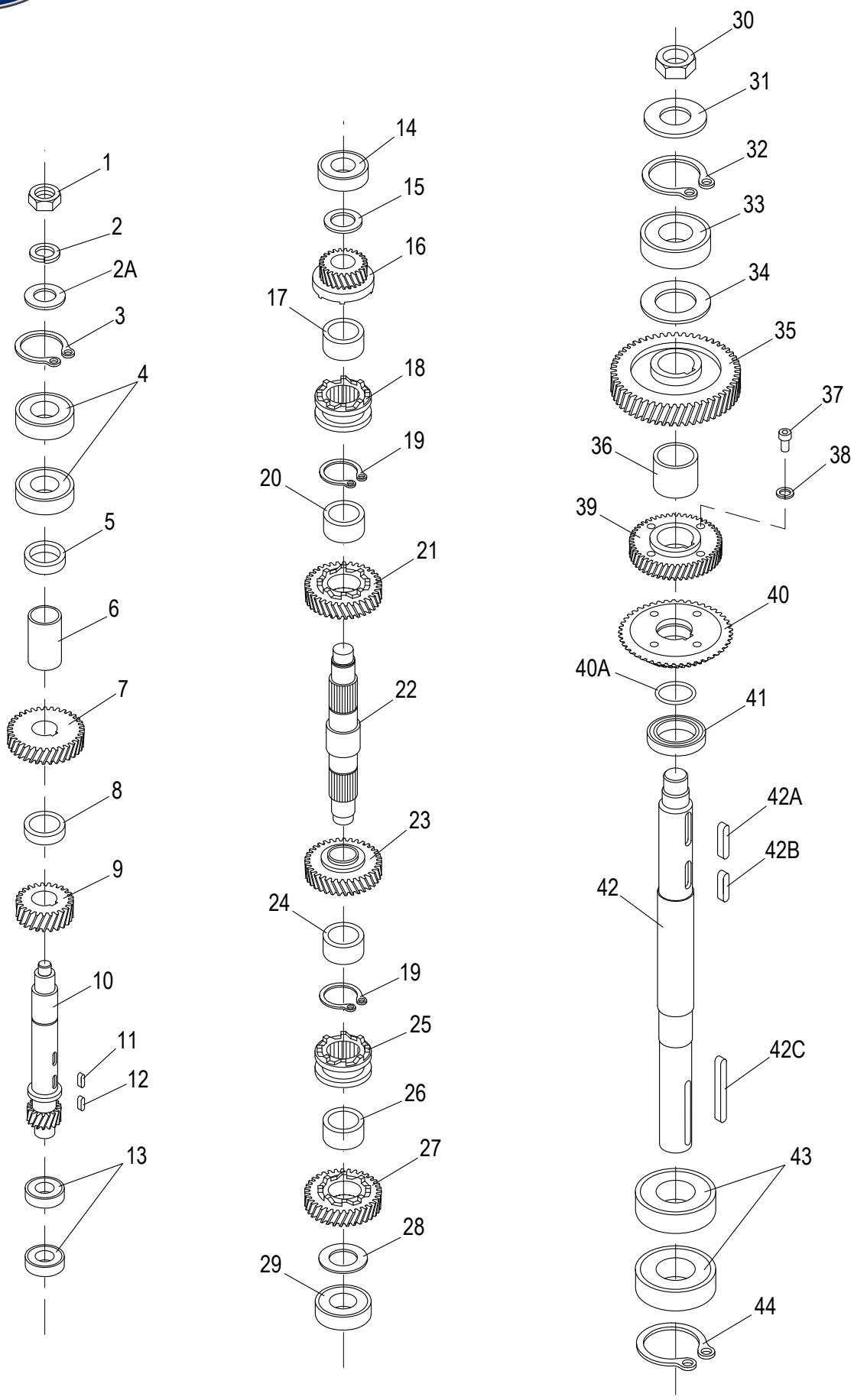

© Globe Food Equipment Company

SP80PL Gearbox Components

Item	Part Number	Description	Qty	Serial Number
1	X30147	Thin Hex Nut M16-1.5, OD-24, TH-8, Zn	1	
2A	H01356	Flat Washer, SS M16, OD-30mm, TH-3mm	1	
3	X80D36	Int. Retaining Ring, B.O. ID-1 3/4", OD-2", TH-0.06"	1	
4	X30043	Bearing (6005LU)	2	
5	X80D38	Extension	1	
6	X80D38-1	Short Bushing	1	
7	X80D39G03-1	Gear & Worm Gear Kit 220V	1	
7	X80D39G03	Gear & Worm Gear Kit (50Hz) 350V	1	
8	X80D40	Bronze Bushing	1	
9	X80D41	Gear (25T)	1	
10	X80D42	Shaft (17T)	1	
11	X80D43	Shaft Key 6x6x18mm	1	
12	X80D44	Round End Key H-8mm, W-8mm, L-20mm	1	
13	X30043	Bearing (6005LU)	2	
14	X10102	Bearing (6205LU)	1	
15	X80D32	Flat Washer, Zinc 29x40x3mm	2	
16	X80D19	Gear & Bushing Assembly (17T)	1	
17	X80D20	Bronze Bushing	1	
18	X80D21	Clutch Sleeve	1	
19	AN68	Ext. Retaining Ring Id-32, OD-35, TH-1.5mm	2	
20	X80D23	Bronze Bushing	1	
21	X80D24	Gear (33T)	1	
22	X80D25	Master Shaft	1	
23	X80D26	Gear (41T)	1	
24	X80D23	Bronze Bushing	1	
25	X80D21	Clutch Sleeve	1	
26	X80D30	Bronze Bushing	1	
27	X80D31	Gear (49T)	1	
28	X80D32	Flat Washer, Zinc 29x40x3mm	1	
29	X10102	Bearing (6205LU)	1	
30	X80D16	Thin Hex Nut, SS M32, OD-46mm, TH-14mm	1	
31	X80D15	Lock Washer, Zinc M33, OD-45mm, TH-3mm	1	
32	X80D14	Int. Retaining Ring, B.O. ID-2 11/16, OD-3", TH-0.09"	1	
33	X80F10	Bearing (6207LU)	1	
34	X62D58	Bushing	1	
35	X80D11	Gear (53T)	1	
36	X80D10	Bushing	1	
37	X80D09	Cap Head Screw, Hex M8-1.25X30mm, B.O.	4	
38	X80D08	Lock Washer, SS M8, OD-13mm, TH-2mm	4	
39	X80D07	Gear (35T)	1	
40	X80D06	Gear (41T) Fits Inside DIA X80D06	1	
40A	X80D05	O-Ring ID-45mm, OD-50mm, TH-3mm	1	
41	X80D02-2	Bushing	1	
42	X80D02	Drive Shaft	1	->7810173
42	X80D02-1	Drive Shaft	1	7810173 ->
42A	X80D04	Round End Key H-8mm, W-10mm, L-36mm	1	
42B	X80D03	Round & Square End Key H-8m, W-10mm, L-27mm	1	
42C	X80D01	Round End Key H-10mm, W-10mm, L-99mm	1	
43	X80D46	Bearing (6009LU)	2	
44	X80D47	Int. Retaining Ring, B.O. ID-2 13/16", OD-3.12", TH-0.09	1	
45	X80D19	Gear & Bushing Assembly (17T)	1	
46	X80D24	Gear (33T)	1	
47	X80D26	Gear (41T)	1	

© Globe Food Equipment Company

SP80PL Gearbox Components

Item	Part Number	Description	Qty	Serial Number
48	X80D31	Gear (49T)	1	

© Globe Food Equipment Company

INTENTIONALLY LEFT BLANK PAGE

© Globe Food Equipment Company

SP80PL Gear Shift Components

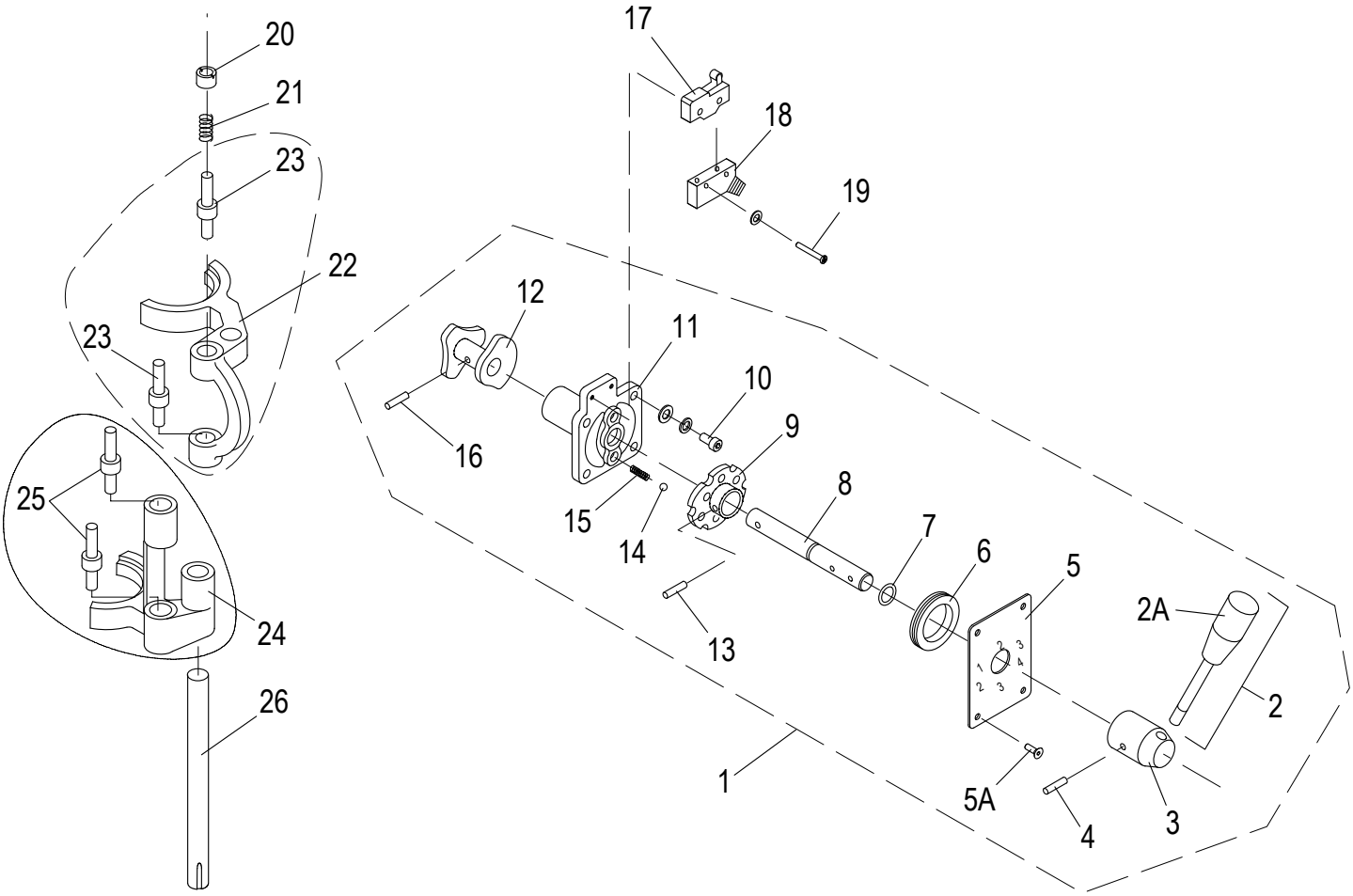

© Globe Food Equipment Company

SP80PL Gear Shift Components

Item	Part Number	Description	Qty	Serial Number
1	X80E01-15	Gear Shift Assembly	1	
2	X80E01	Lever With Knob	1	
2A	X80E01-1	Knob	1	
3	X80E02	Hub	1	
4	X80E03	Slotted Spring Pin, B.O. OD-5mm, L-36mm, TH-1mm	1	
5	X80E04	Speed Indication Plate	1	
5A	X30056	Truss Hd Screw, Phllips M5-0.8x12mm, SS	4	
6	X80E05	Oil Seal	1	
7	X80E06	O-Ring	1	
8	X80E07	Shifter Guide Rod	1	
9	X80E08	Hub & Cam Assy	1	
10	X80E09	Cap Head Screw, B.O., Hex M8-1.25X25mm	4	
11	X80E10	Shaft Cover	1	
12	X80E11	Cam	1	
13	X80E12	Roll Pin	1	
14	X80E13	Steel Ball Ø9mm	2	
15	X80E14	Spring	2	
16	X80E15	Slotted Spring Pin, B.O. OD-6mm, L-23mm, TH-1mm	1	
17	X80E16	Microswitch	1	
18	X80E17	Microswitch Cover	1	
19	X80E18	Pan Head Screw, Zinc, Combo M4-0.7X25mm	2	
20	X80E19	Nut M20	4	
21	X80E20	Spring	4	
22	X80E22	Top Yoke	1	
23	X80E21	Touch Shaft	2	
24	X80E23	Bottom Yoke	1	
25	X80E21	Touch Shaft	2	
26	X80E24	Guide Rod	1	

© Globe Food Equipment Company

SP80PL Planetary Components

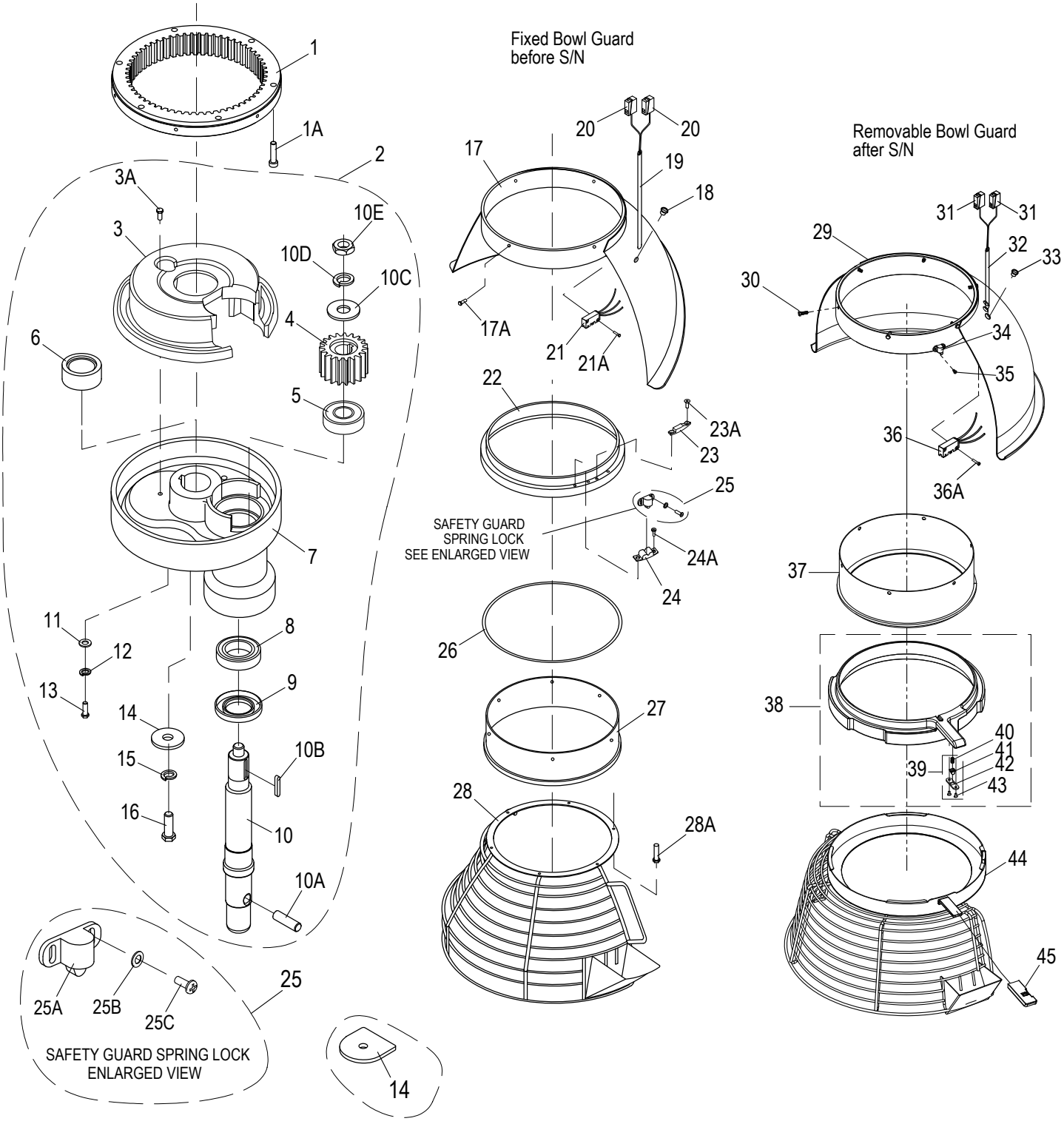

© Globe Food Equipment Company

SP80PL Planetary Components

Item	Part Number	Description	Qty	Serial Number
1	X80F01	Gear (59T)	1	
1A	X30099	Cap Hd Screw, Hex, B. O., M8-1.25x35mm	6	
2	X01359	Planetary Assembly	1	
3	X80F09-2	Cover	1	
3A		Screw, Hex Hd	1	
4	X80F06	Pinion Gear (18T)	1	
5	X80F07	Bearing (6306LU)	1	
6	X80F18	Oil Guard Bushing	1	
7	X80F09-DG	Planetary Holder	1	
8	X80F10	Bearing (6207LU)	1	
9	X80F11	Oil Seal ID-40mm, OD-72mm, TH-12mm	1	
10	X62F13	Planetary Shaft	1	->7810173
10	X80F13-1	Planetary Shaft	1	7810172 ->
10A	X80F14	Planetary Shaft Pin M14x38mm	1	
10B	X40081	Round End Key H-6xW-6xL-35mm	1	
10C	X80F05	Oversized Flat Washer M17, OD-44, TH-3mm	1	
10D	X30020	Washer & Nut Kit	1	
10E	X30147	Thin Hex Nut M16-1.5, OD-24, TH-8, Zn	1	
11	X08101	Flat Washer, Zinc M8, OD-16mm,TH-1.5mm	2	
12	X80F21	Washer M10 Split Lock	2	
13	X80F22	Ext. Hex Hd Screw M10-1.5x16mm	2	
14	X80F23	Washer M8 Flat - Round	1	->7810173
14	X80F23-1	D-Shaped Flat Washer M10, OD-58mm, TH-5mm	1	7810172 ->
15	X80F24	Lock Washer M10, OD-18mm, TH-2mm	1	->7810173
15	X80F24-1	Lock Washer, SS M10, OD-17mm, TH-2mm	1	7810172 ->
16	X80F25	Ext. Hex Hd Screw M8-1.25X25mm, Zinc	1	->7810173
16	X80F25-1	Ext. Hex Hd Screw M10-1.5x25mm	1	7810172 ->
17	X80J32-33	Rear Guard, Fixed	1	
17A	X80F16	Ext. Hex Hd Screw, SS M5-0.8x16mm	6	
18	X80J34	Access Plug	2	
19	X80J31A1	Wireway	1	
20	X80J31	Connector	2	
21	X80J35	Microswitch, Safety Interlock	1	->7810122
21	X80J35-1	Microswitch Kit	1	7810121 ->
21A	X80J36	Cap Hd Screw, Hex M3-0.5x16mm	2	
22	X80J43-1	Slide Sheath	1	
23	X10041	Touch Mass	1	
23A	X10042	Flat Hd Screw-Phillips M4-0.7x10mm, Zn	2	
24	X80J42	Safety Guard Spring Lock Fixture	1	
24A	X80J41	Cheese Hd Screw, Phillips, Zinc M4-0.7X12mm	2	
25	X80J39	Safety Guard Spring Lock W/Hardware	1	
25A		Safety Guard Spring Lock	1	
25B		Washer M3 Flat	1	
25C	X10134B	Round Hd Screw-PHH M3-0.5x8mm, SS	2	
26	X80J44	Gasket	1	
27	X80J45	Cover, Internal Planetary Gear	1	
28	X80J46/48	Front Interlocking Guard Assy	1	
28A	X80J47	Screw M5x12mm Hex Hd - SS	8	
29	X02616	Rear Guard	1	
30	X80F16	Ext. Hex Hd Screw, SS M5-0.8x16mm	6	
31	X80J31	Connector	2	
32	X80J31A1	Wireway	1	
33	X03151	Removable Guard Access Plug	2	

© Globe Food Equipment Company

Item	Part Number	Description	Qty	Serial Number
34	X10134	Spring Lock Assembly	1	
35	X10134B	Round Hd Screw-PHH M3-0.5x8mm, SS	1	
36	X03022	Microswitch Kit	1	
36A	X80J36	Cap Hd Screw, Hex M3-0.5x16mm	2	
37	X02612	Cover	1	
38	X02613	Slide Sheath	1	
39	X200S3	Spring Lock Kit	1	
40		Spring	1	
41		Plunger	1	
42		Plate, Plunger Retention	1	
43		Screw M3x8mm Flat Hd	2	
44	X02615	Removable Bowl Guard	1	
45	X20504	Plastic Handle	1	

© Globe Food Equipment Company

INTENTIONALLY LEFT BLANK PAGE

© Globe Food Equipment Company

SP80PL Motor Components

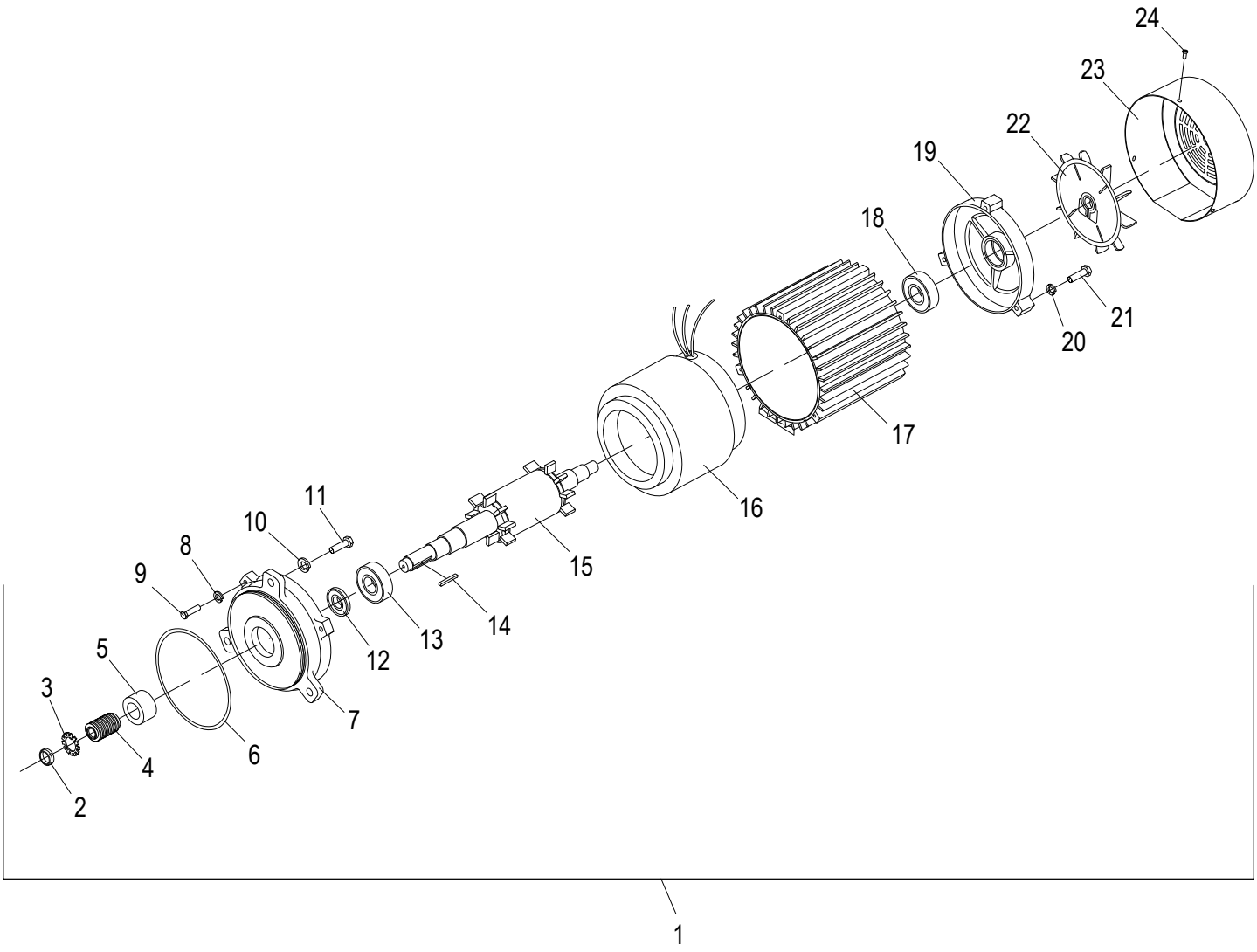

© Globe Food Equipment Company

SP80PL Motor Components

Item	Part Number	Description	Qty	Serial Number
1	X80G24	Motor (208V/60Hz/3Ph/12A)	1	
1	X80G1-23	Motor (380V/50Hz/3Ph/8A)	1	
2	X80G01	Nut	1	
3	X80G02	Lock Washer, Zinc M25, OD-42mm, TH-1.25mm	1	
4	X80D39G03	Gear & Worm Gear Kit (50Hz)	1	
4	X80D39G03-1	Gear & Worm Gear Kit	1	
5	X80G04	Bushing	1	
6	X80G05	O-Ring (2/Set)	1	
7		Motor Front Cover	1	
8	X80G07	Washer M6 Split Lock	6	
9	X80G06	Ext. Hex Hd Screw, Zinc M6-1.0X30mm	6	
10	X01372	Lock Washer,SS M12, OD-21mm, TH-2.5mm	3	
11	X80B04	Ext. Hex Hd Screw, B.O., M12-1.75x40mm	3	
12		Washer	1	
13	X40125	Bearing (6307LU-X)	1	
14	X10108	Round End Key H-6mm, W-6mm, L-45mm	1	
15		Motor Shaft	1	
16		Motor Coil	1	
17		Motor Body	1	
18	X10012	Bearing (6204Z)	1	
19		Rear Motor Cover	1	
20	X80G07	Washer M6 Split Lock	3	
21	X80G06	Ext. Hex Hd Screw, Zinc M6-1.0X30mm	3	
22	X40061	Fan	1	
23		Fan Cover	1	
24		Screw M5x12mm Pan Hd	1	

© Globe Food Equipment Company

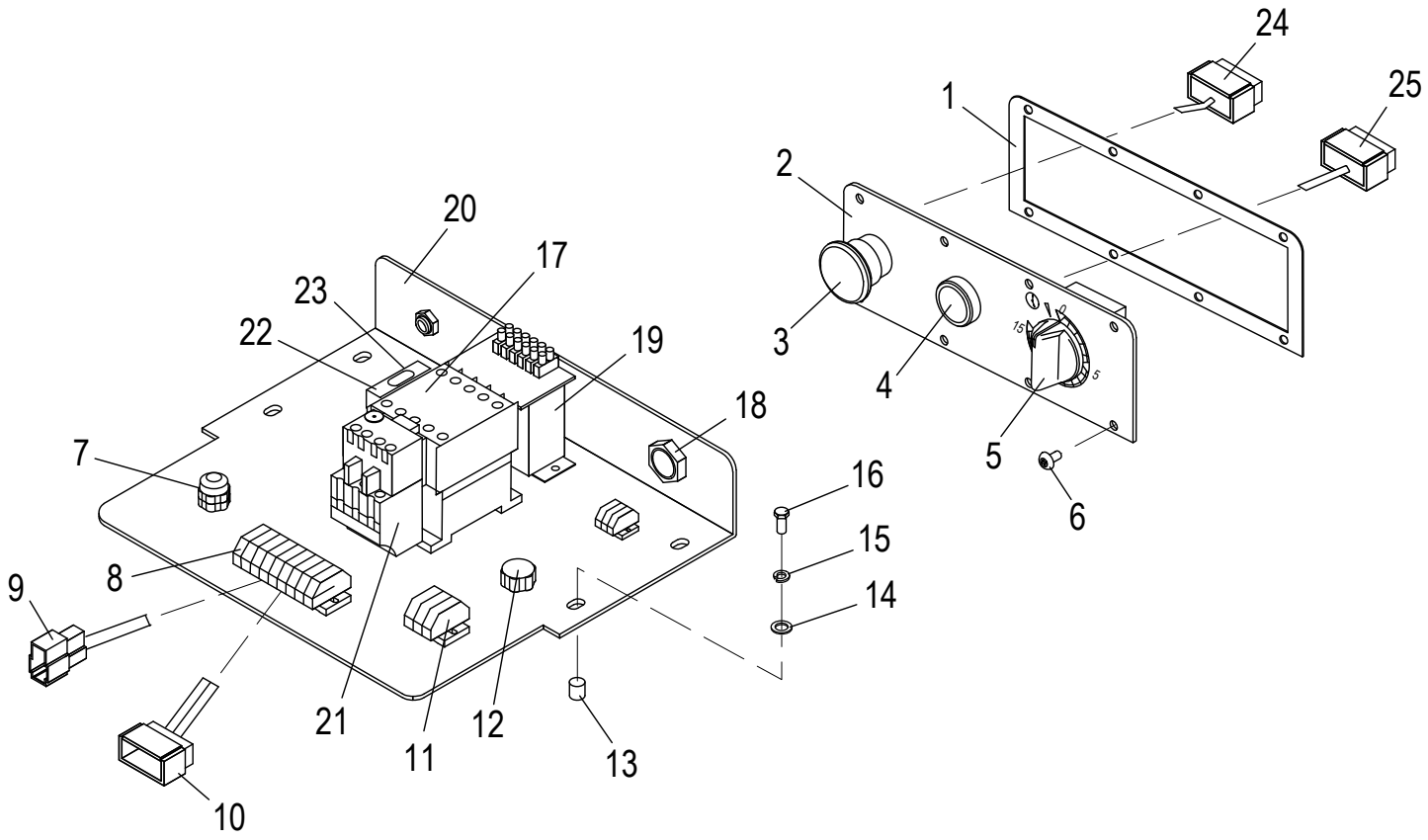

© Globe Food Equipment Company

Item	Part Number	Description	Qty	Serial Number
1	X80J01	Gasket	1	
2	X80J02	Control Panel, Manual	1	
3	X80J03	Stop Button	1	
4	X80J04	Start Button	1	
5	X10137	Timer Kit	1	
5	X101037-1	Timer Knob	1	
6	X80J06	Screw M4x10mm Truss Hd	8	
7	X80J07	Mounting Plate Strain Relief	4	
8	X80J08	Connecting Block	1	
9	X80J09	Wire Harness	1	
10	X80J10	Wire Harness	1	
11	X80J11	Terminal Block	3	
12	X80J12	Support Tube	1	
13	X80J13	Socket	4	
14	X80J14	Flat Washer, SS, M6, OD-12mm, TH-1mm	4	
15	X80J15	Lock Washer, SS, M6, OD-12mm, TH-2mm	4	
16	X80J16	Ext. Hex Hd Screw M6x1.0x20 mm SS	4	
17	X80J17	Contactor, 24V	1	
18	X80J18	Support Tube	1	
19	X80J19	Transformer (220V)	1	
19		Transformer, 24V (380V Mixer) 380V Square D transformer.	1	
20	X80J20	Mounting Plate	1	
21	X80J21	Overload Relay	1	
22	X80J22	Fuse	2	
23	X80J23	Fuse Fixture	3	
24	X80J24	Connector	1	
25	X80J25	Connector	1	

© Globe Food Equipment Company

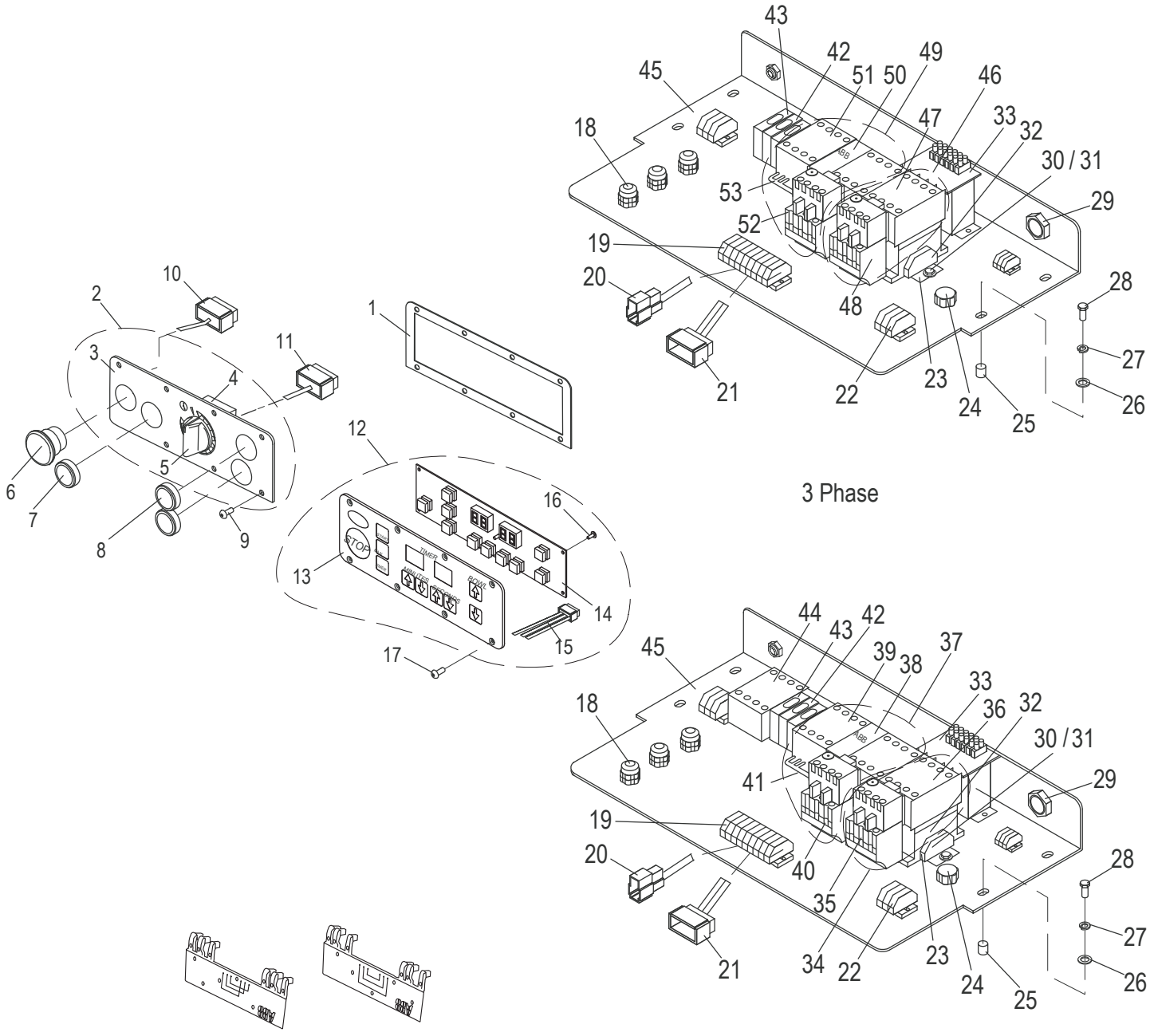

3 Phase

1 Phase

*Items 41 & 53

© Globe Food Equipment Company

Item	Part Number	Description	Qty	Serial Number
1	X80J01	Gasket	1	
2	X80J49	Faceplate And Timer Assembly	1	
3	X80J02	Control Panel, Manual	1	
4	X10137	Timer Kit	1	
5	X10137-1	Timer Knob	1	
6	X80J03	Stop Button	1	
7	X80J04	Start Button	1	
8	X80J26	Bowl Raise/Lower Button	2	
9	X30204	Truss (Extra Wide) Hd Screw M4-0.7X10mm	8	
10	X80J24	Connector	1	
11	X80J25	Connector	1	
12	X80J02-1	Control Panel Kit	1	
13	X02068	Digital Control Panel	1	
14	X00679	Control Board	1	
15		Wiring	1	
16	H02502	Cheese Hd Screw-Slotted, Zn, M3x10mm	5	
17	X30204	Truss (Extra Wide) Hd Screw M4-0.7X10mm	8	
18	X80J07	Mounting Plate Strain Relief	4	
19	X80J08	Connecting Block	1	
20	X80J09	Wire Harness	1	
21	X80J10	Wire Harness	1	
22	X80J11	Terminal Block	3	
23		Contactor Mounting Plate	1	
24	X80J12	Support Tube	1	
25	X80J13	Socket	4	
26	X80J14	Flat Washer, SS, M6, OD-12mm, TH-1mm	4	
27	X80J15	Lock Washer, SS, M6, OD-12mm, TH-2mm	4	
28	X80J16	Ext. Hex Hd Screw M6x1.0x20 mm SS	4	
29	X80J18	Support Tube	1	
30	X08156	Cheese Hd Screw, Phillips M3-0.5x16mm,SS	2	
31	X10134A	Lock Washer, SS M3, OD-6mm, TH-1mm	2	
32		Contactor Locking Caps	2	
33	X03133	Transformer (208V)	1	
33		Transformer, 24V (380V Mixer) *380V Square D transformer.	1	
34	X02061	Electrical Relay Kit (24V/50-60Hz/1Ph/25A)	1	
35	X02055	Relay (50-60Hz/25A)	1	
36	X02058	Contactor (24V/50-60Hz/1-3Ph/25A)	1	
37	X02062	Lift Motor Relay Kit (24V/50-60Hz/1Ph/9A)	1	
38	X01942	Bridge	1	
39	X01945	Contactor (24V/50-60Hz/1-3Ph/9A)	2	
40	X02056	Lift Motor Relay (50-60Hz/2.4A)	1	
41	X01943	Connector	1	
42	X80J22A	Fuse (250V/500Ma)	2	
42	X00570	Fuse (250V/1A-Time Delay)	1	
43	X80J23	Fuse Fixture	3	
44	X02059	Contactor (220-240V/50-60Hz/1Ph/12A)	1	
45	X80J20	Mounting Plate	1	
46	X02063	Electrcial Relay Kit (24V/50-60Hz/3Ph/18A)	1	
47	X02060	Contactor (24V/50-60Hz/1-3Ph/18A)	1	
48	X30154PABB	Relay (50-60Hz/14A)	1	
49	X02064	Lift Motor Relay Kit (24V/50-60Hz/3Ph/9A)	1	
50	X01943	Connector	2	
51	X01942	Bridge	1	

© Globe Food Equipment Company

Item	Part Number	Description	Qty	Serial Number
52	X80J30	Lift Motor Relay (50/60Hz/1A)	1	
53	X01945	Contactor (24V/50-60Hz/1-3Ph/9A)	2	

© Globe Food Equipment Company

INTENTIONALLY LEFT BLANK PAGE

© Globe Food Equipment Company

SP80PL Bowl Scraper Components

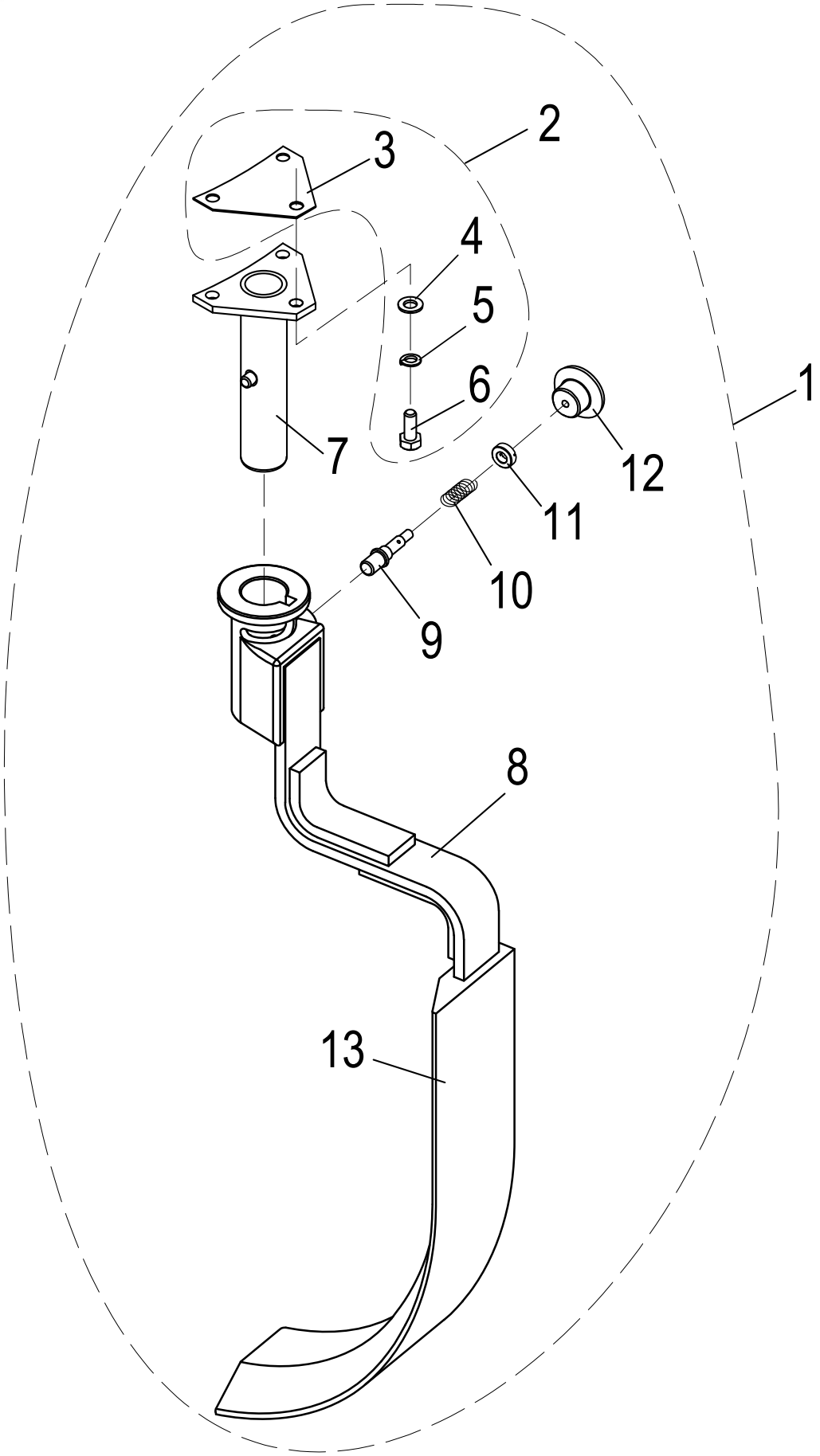

© Globe Food Equipment Company

SP80PL Bowl Scraper Components

Item	Part Number	Description	Qty	Serial Number
1	XXSCRP-80	Bowl Scraper Assembly	1	7810035 ->
2	X80519	Hardware Kit	1	7810035 ->
3		Spacer	1	7810035 ->
4	X80J520	Scraper Hub	1	7810035 ->
5	X01759	Flat Washer M8, ID-8.4, OD-24, TH-2mm	3	7810035 ->
6	H00527	Split Lock Washer	3	7810035 ->
7	X30197	Ext. Hex Hd Screw SS, M8-1.25x25mm	3	7810035 ->
8	X80521	Scraper Attachment Arm	1	7810035 ->
9	X80522	Pin	1	7810035 ->
10	X80523	Spring	1	7810035 ->
11	X80524	Spacer	1	7810035 ->
12	X80525	Knob	1	7810035 ->
13	X80526	Rubber Scraper	1	7810035 ->

© Globe Food Equipment Company

SP80PL Wiring Diagram, Manual Lift Mixer

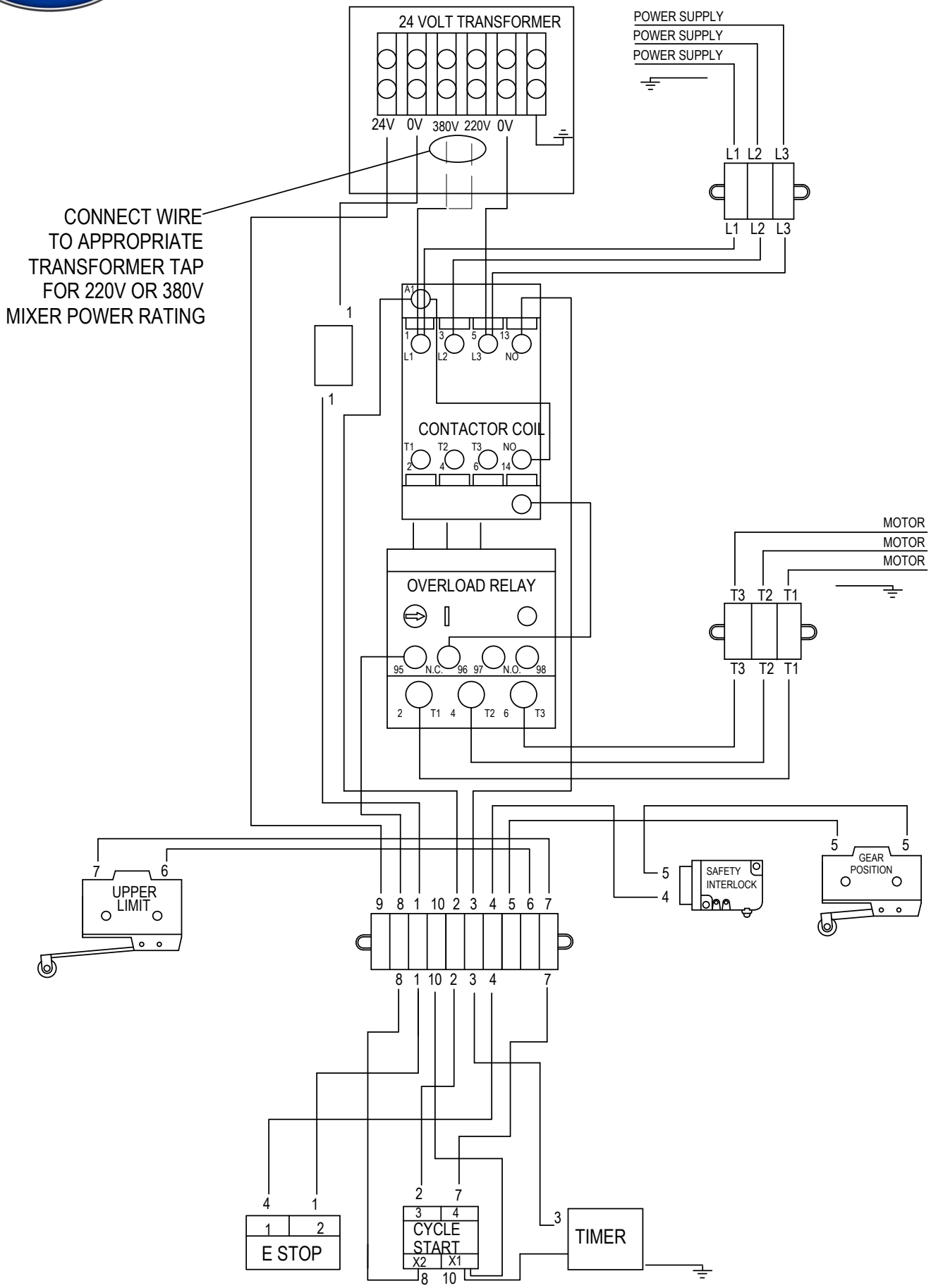

© Globe Food Equipment Company

SP80PL Wiring Diagram, Power Lift Mixer

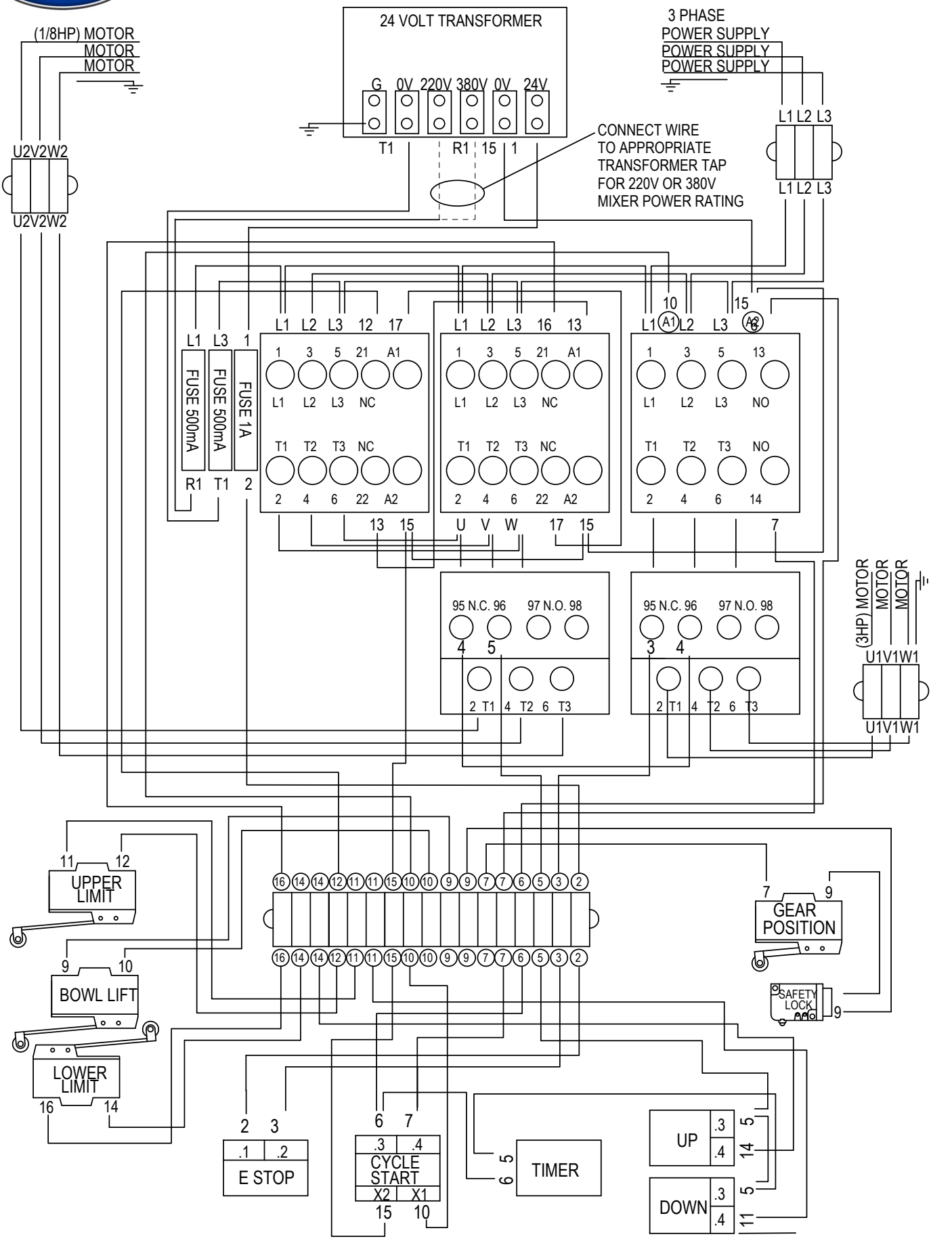

© Globe Food Equipment Company

SP80PL 3 PH 220V Power Lift Mixer Schematic

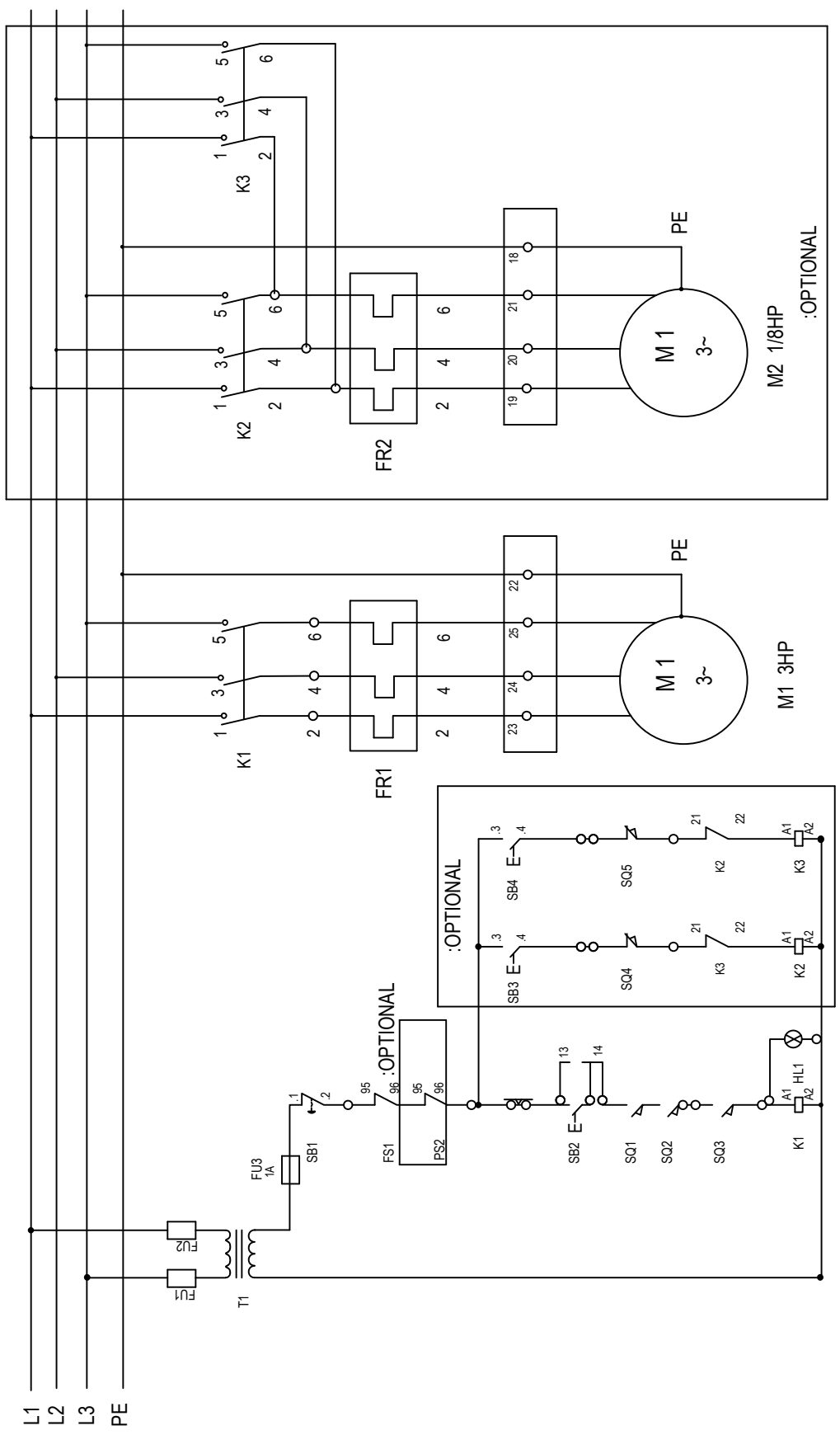

FU4	FUSE FIXTURE + FUSE 1A (5 X 20)
FU5	FUSE FIXTURE + FUSE 1A (5 X 20)
FU6	FUSE FIXTURE + FUSE 1A (5 X 20)
SB1	EMERGENCY STOP BUTTON
SB2	START BUTTON
K1	CONTACT COIL 24VAC
FS1	OVERLOAD RELAY

M1	MOTOR, 3HP, 3PH, 220V OR 380V
KT1	TIMER
SQ1	MICROSWITCH (TRANSMISSION GEAR)
SQ2	MICROSWITCH (INTERLOCK GUARD)
SQ3	MICROSWITCH (BOWL LIFT SAFETY)
SQ4	MICROSWITCH (BOWL LIFT UPPER LIMIT)
SQ5	MICROSWITCH (BOWL LIFT LOWER LIMIT)

SB3	RAISE BUTTON
SB4	LOWER BUTTON
M2	MOTOR, 1/8HP, 3PH, 220V OR 380V
K2	RAISE CONTACTOR COIL, 24VAC
K3	LOWER CONTACTOR COIL, 24VAC
FS2	OVERLOAD RELAY
T1	TRANSFORMER, 24VAC

© Globe Food Equipment Company

SP80PL Wiring Diagram, Power Lift Mixer-Digital Control Panel

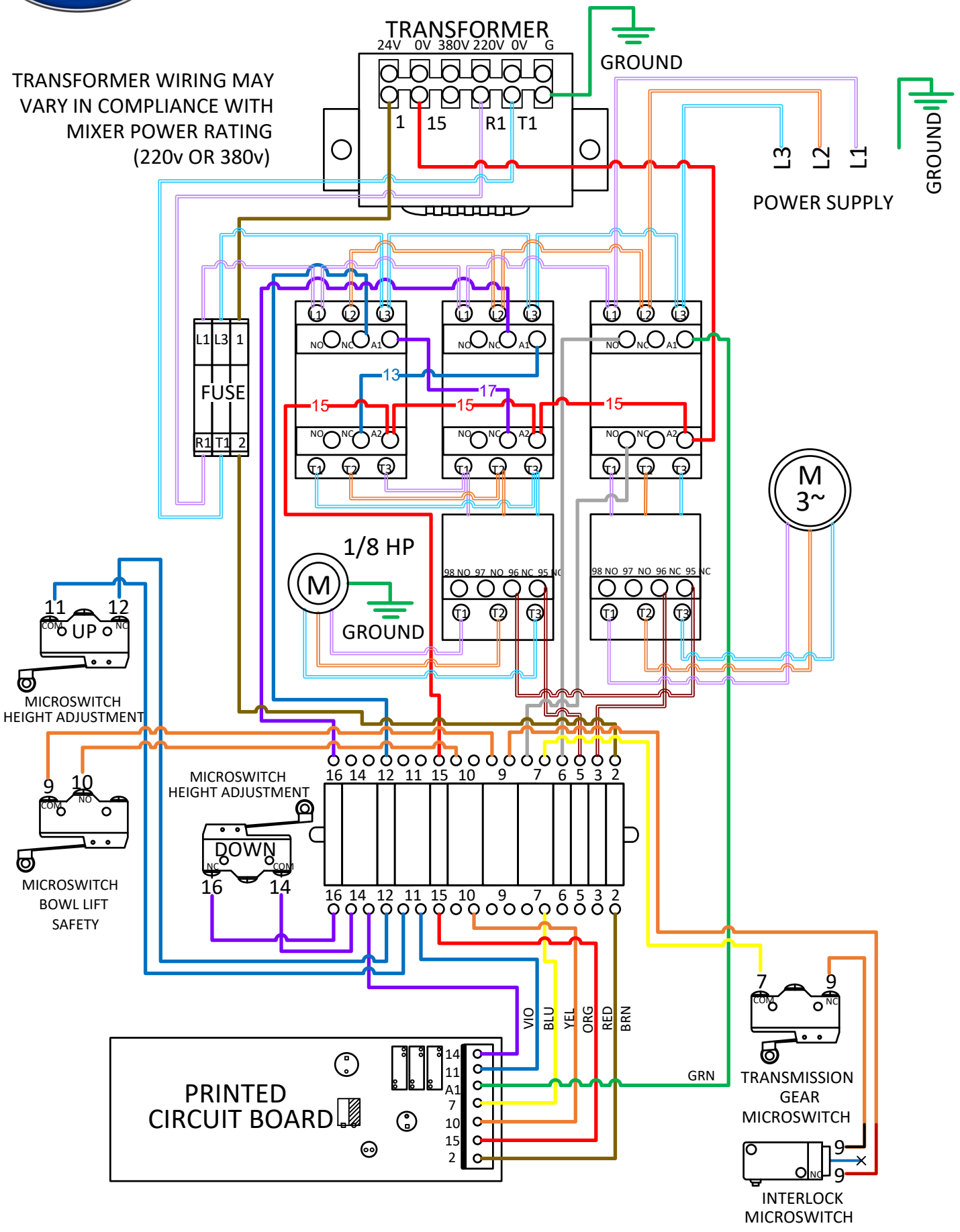

© Globe Food Equipment Company